10.4” Rugged Tablet PC

R10IH8M-RTT2GP

PRIMARY NETWORKS

Product Features:

- Intel Core i5-5200U Broadwell 2.2GHz (turbo to 2.7GHz)
- Intel HD Graphics 4400
- 10.4" High Quality 1024 x 768 Resolution TFT-LCD Panel
- Visible Light Transflection touch enhanced Visibility
- Alu-Mg Alloy Housing with Protective Rubber for MIL-810G Shock, Vibration and Drop Std.
- Trusted platform module (TPM) V1.2
- Bulit-in Wireless / Bluetooth / GPS
- Support 3G or 4G module (Optional)
- 6 cell, 5200mAh Lithium-Ion Battery Pack
- Low Power consumption CPU only 15W
- Adjustable Kickstand that is convertable to a handle (optional)

Optional kickstand

Product Specifications:

CE FC

System Specification	Processor	Intel Core i5-5200U Broadwell 2.2GHz (turbo to 2.7GHz)
	System Memory	4GB SODIMM DDR3L-1600, (Max 8GB)
	Storage	64GB mSATA MLC SSD, (Max 512GB)
	Operating System	Windows 10 IoT Enterprise / Windows 8.1 Industry Pro / Windows Embedded Standard 7 (WS7P 64-bit) / Windows 7 Pro for Embedded Systems 64 bit
Display Specification	Size / Technology	10.4"
	Resolution	1024 x 768
	Brightness	700 nits
	Touch	4W Resistive Touch
Wireless Communication	WLAN	802.11 a/b/g/n
	Bluetooth	Bluetooth 4.0 + Class I
	GPS	u-Blox Neo-6Q
	WWAN	Optional 4G (LTE,HSPA+,GSM/GPRS/EDGE,EV-DO Rev A, 1xRTT) or optional 3G (HSPA+,GSM/GPRS/EDGE)
System I/O Buttons Indicators Sensors Security	Audio	Built-in 1W Speaker
	External I/O	2 x USB3.0, 1 x Audio Combo Conn. (Mic in or Line Out), 1 x SD card Slot, 1 x SIM card Slot, 1 x Power Jack, 1 x RS232/422/485(set by jumper), 1 x RJ-45
	Buttons	1 x Power, 1 x Menu, 3 x Function Key, 2 x Brightness control key
	LED Indicators	Power, Battery, HDD, RF
	Sensors	Light sensor
Data Capture	Camera	5MP Auto-Foucs Camera at rear / 2MP Camera at front side(optional)
	Barcode	1D/2D Barcode Reader (optional)
Mechanical and Environment	Dimension (W x L x H)	266 x 220 x 50.5 mm
	Weight	2.39kg
	Operating Temperature	-20°C to 60°C (AC Mode), -10°C to 50°C (Battery Mode)
	Operating Humidity	10 to 90% RH, non-condensing
	IP Proof	Default IP54(Optional for IP65)
	Shock	MIL-STD-810G Method 516.6 Procedure I
	Vibration	MIL-STD-810G Method 514.6 Procedure I
	Drop	MIL-STD-810G Method 516.6, 4 ft to concrete
	Certifications	CE, FCC
Power Management	Power Input	19V DC
	Battery	11.1V, 5200 mAh Lithium-Ion Battery (6cells)
	Battery Operating Time	8 hours **
	Adapter	100-240V, 50-60Hz / 19V DC

Dimensions :

* Note: this is a simplified drawing and some components are not marked in detail. Please contact our sales representative if you need further product information.

** Note: Measured at dimming LCD brightness. Varies depending on the usage conditions, or when an external device is attached.

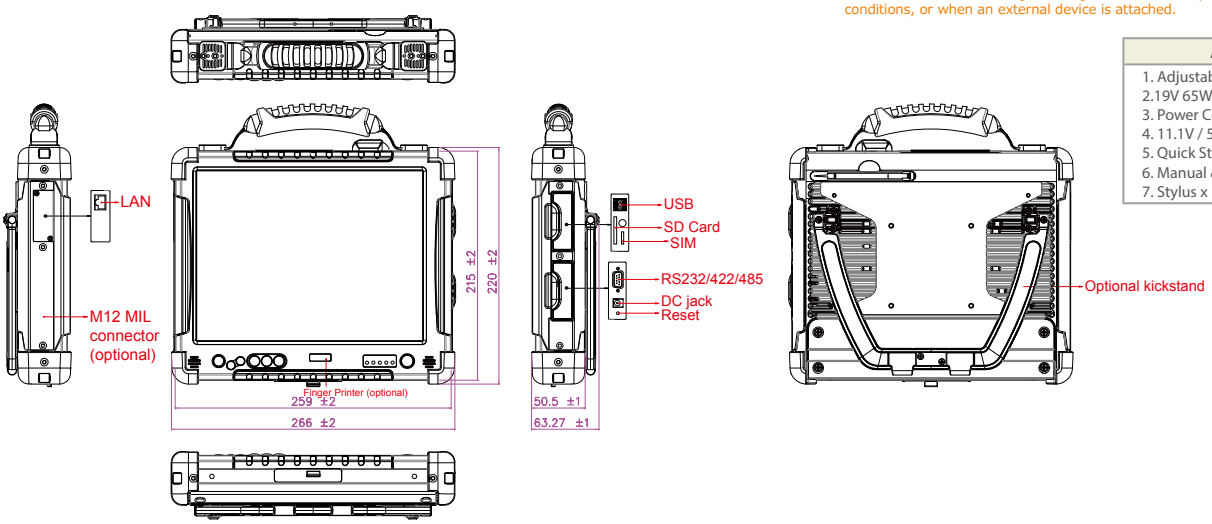

Accessories
1. Adjustable Kickstand (Optional)
2.19V 65W Power Adapter x 1
3. Power Cord x 1
4. 11.1V / 5200mAh Battery x 1
5. Quick Start Guide x 1
6. Manual & Driver CD x 1
7. Stylus x 1

Release Date
Dec.11.15